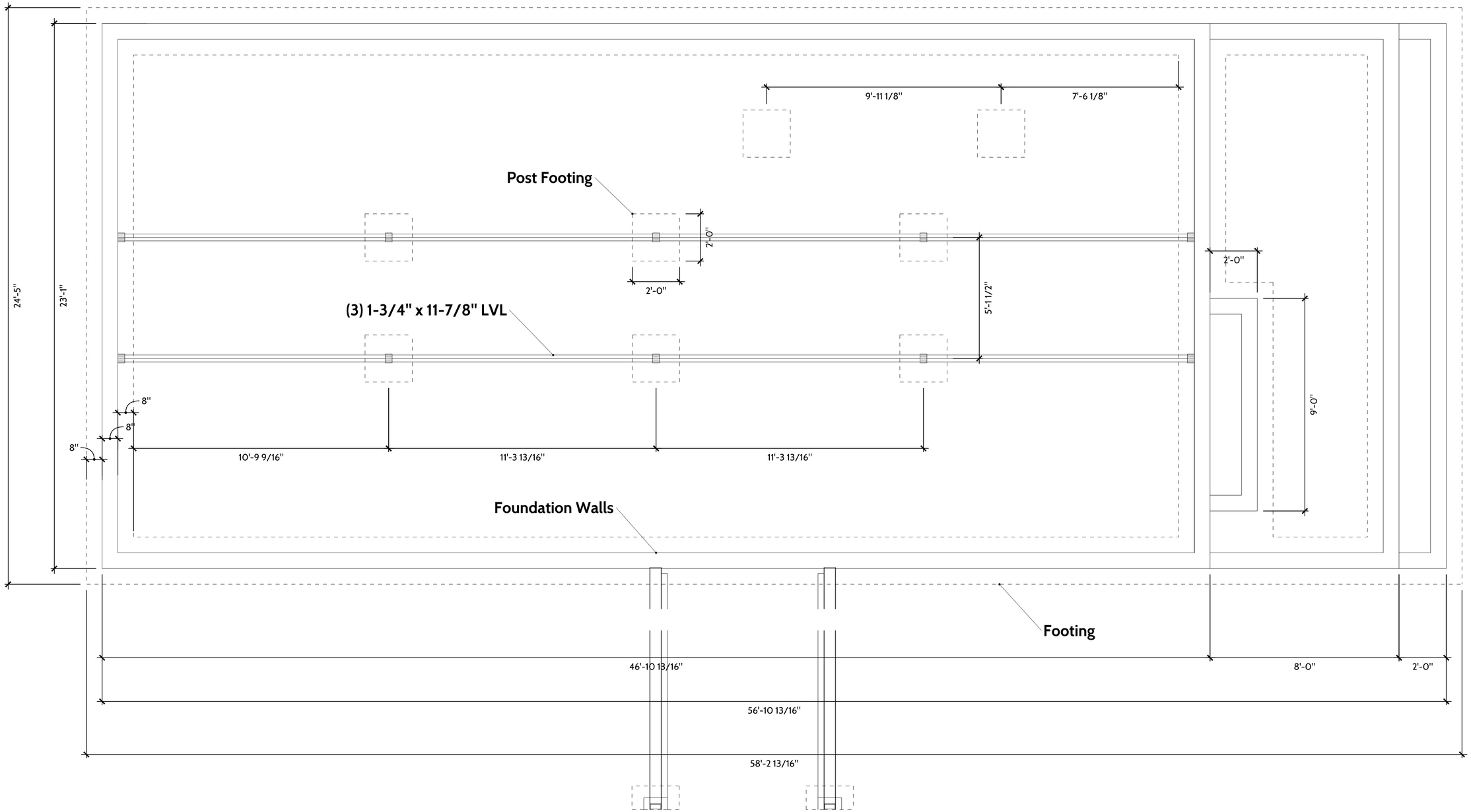

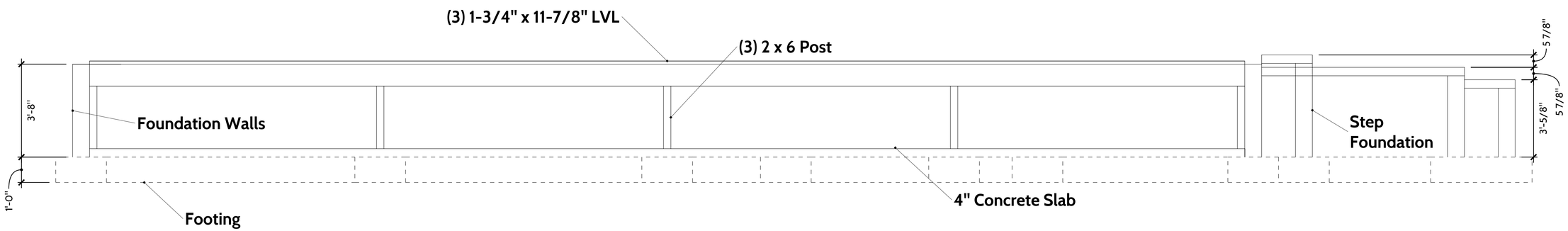

ENV
116 EAST 27TH STREET, 2ND FLOOR
NEW YORK, NY 10016
TEL 212 | 679 | 8100
ENV-team.com

PROJECT
LONG EDDY

PROJECT ADDRESS
LONG EDDY, NY 12760

ISSUE
05.27.2021

RE-ISSUE

PROJECT NO.
[ENTER]

CLIENT
Client Name
Client Address

DRAWN BY
TLH

DESCRIPTION
Foundation

a

01