Figure 21. Typical Receptacle Box Installation

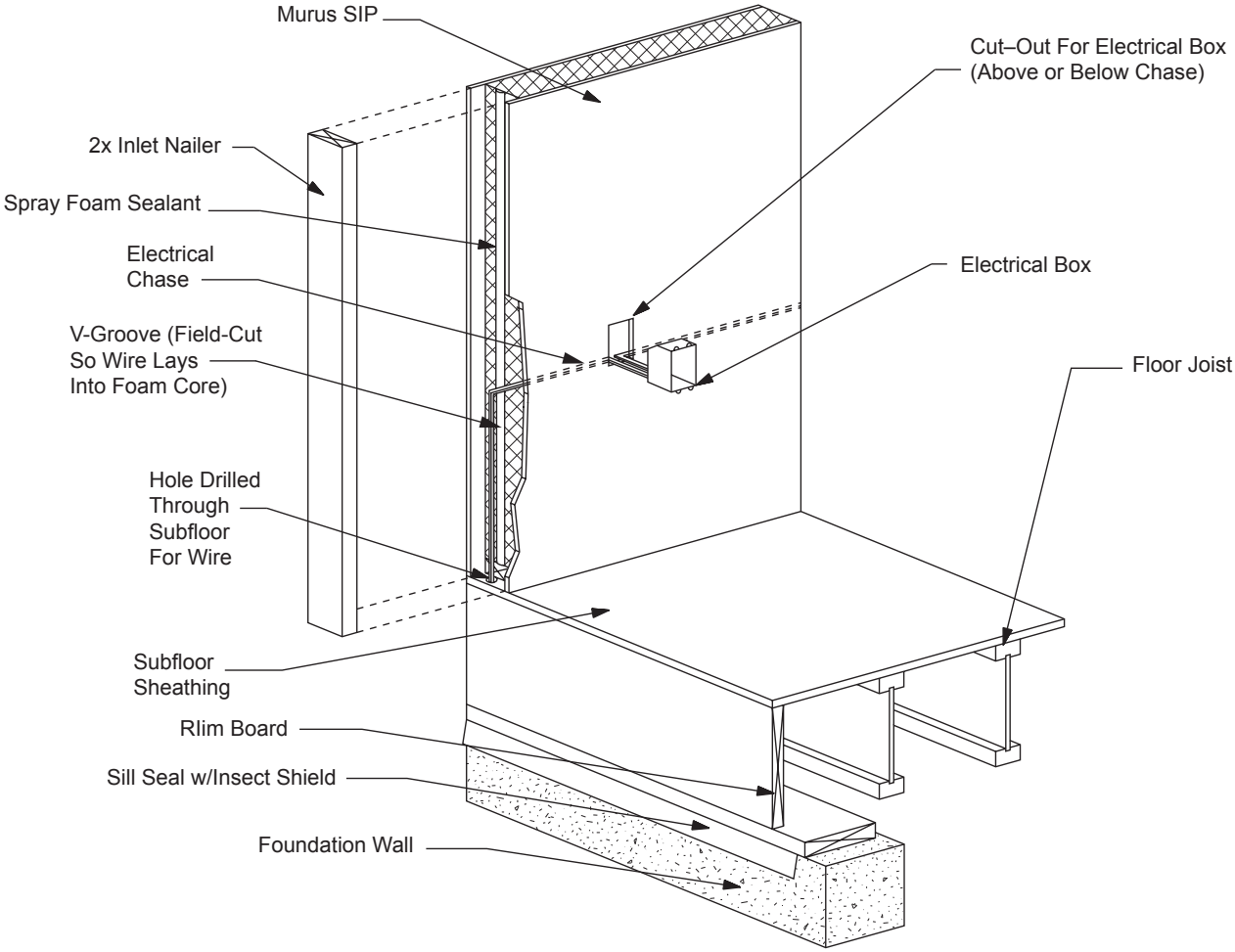

Detail courtesy The Murus Company, Inc. · Reproduced by NorthEast SIPs with permission