Figure 15. Typical rafter system detail

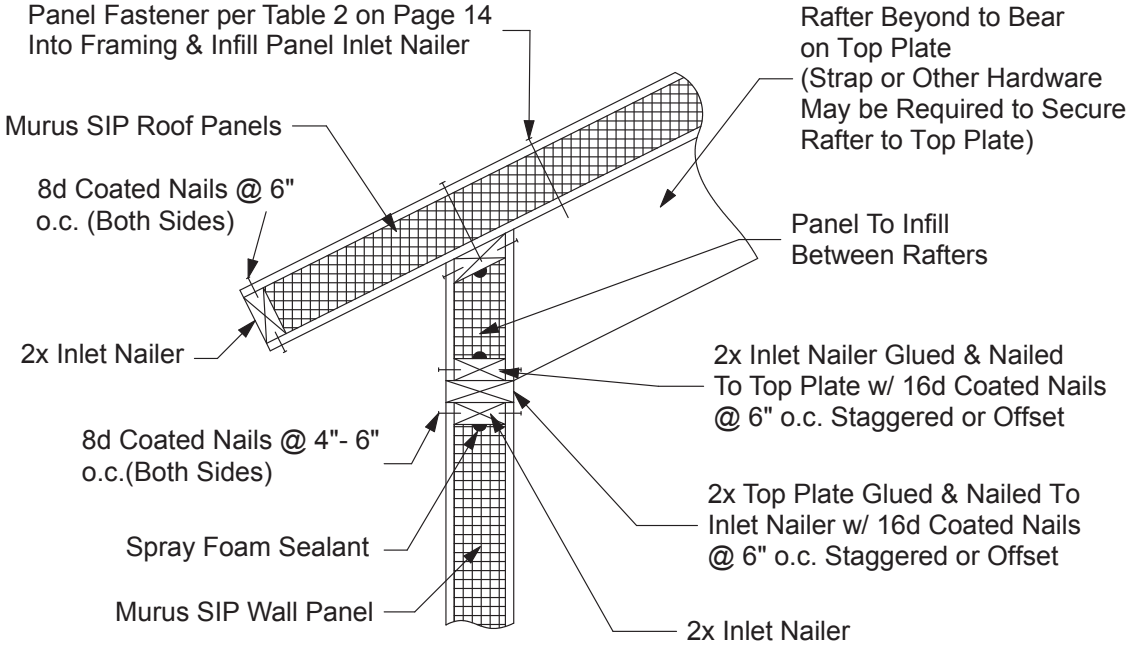

Detail courtesy The Murus Company, Inc. · Reproduced by NorthEast SIPs with permission