Figure 13E. Typical Eave Detail with Starter Purlin Roof System

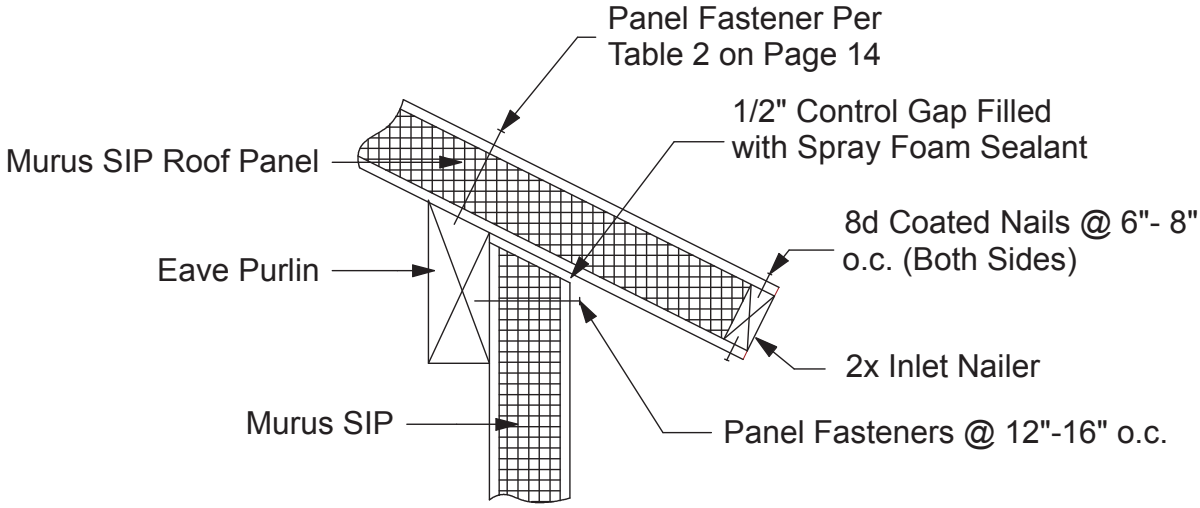

Detail courtesy The Murus Company, Inc. · Reproduced by NorthEast SIPs with permission