Figure 19C. Structural Ridge Details

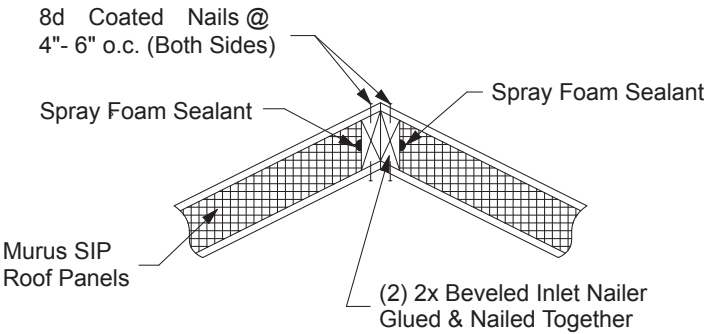


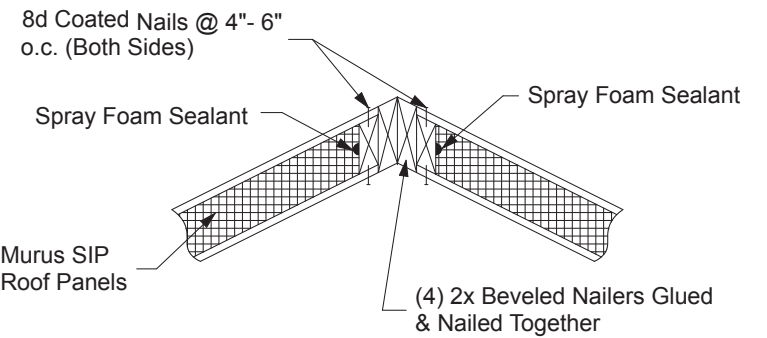


Detail courtesy The Murus Company, Inc. · Reproduced by NorthEast SIPs with permission