Figure 10A. Single Key Spline
Used for joining panels in some non load-bearing applications

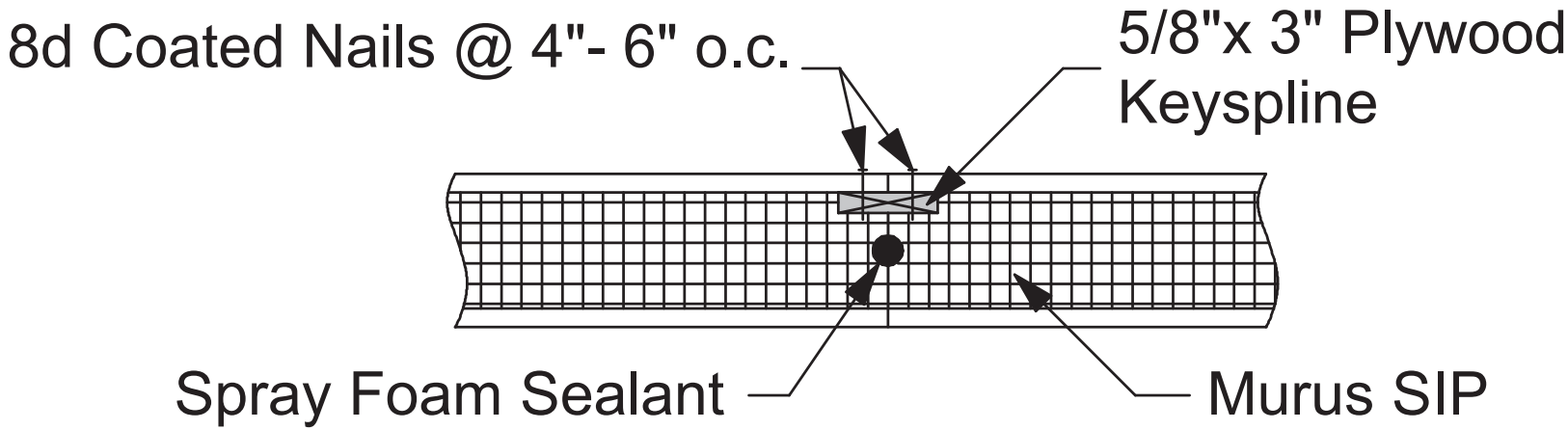

Detail courtesy The Murus Company, Inc. · Reproduced by NorthEast SIPs with permission