Figure 20A. Rough Opening Details

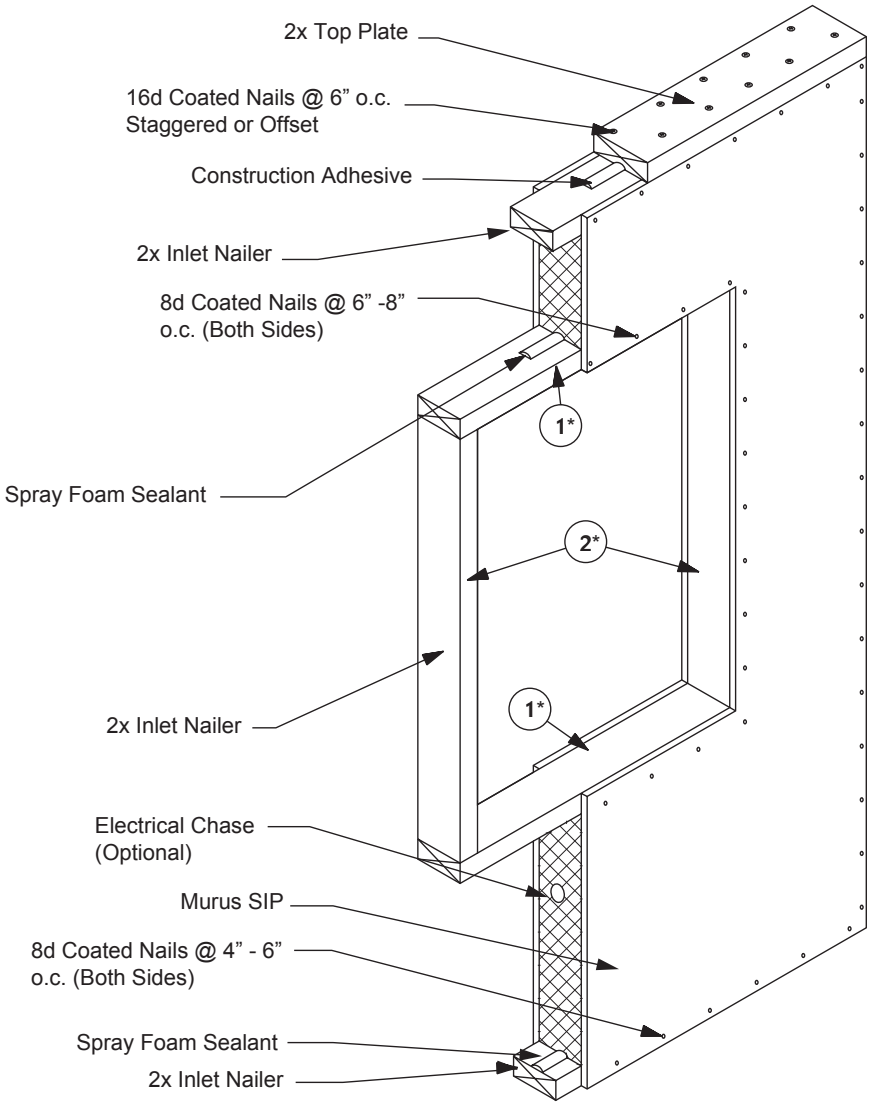

Detail courtesy The Murus Company, Inc. · Reproduced by NorthEast SIPs with permission