Figure 8B. Platform Framing Joist System

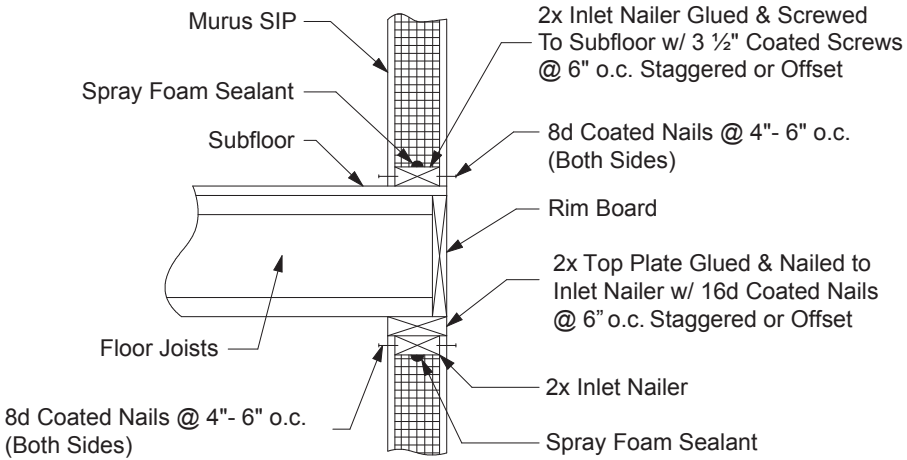

Detail courtesy The Murus Company, Inc. · Reproduced by NorthEast SIPs with permission