Figure 8A. Hung Joist Floor System

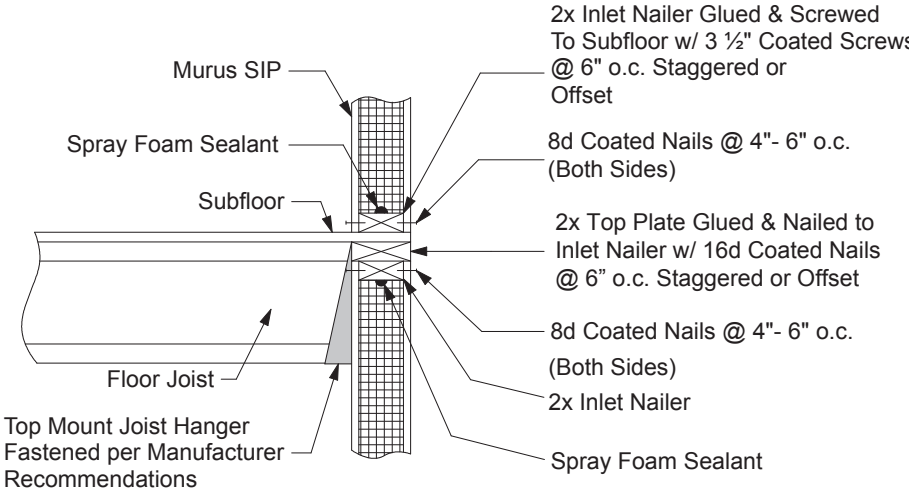

Detail courtesy The Murus Company, Inc. · Reproduced by NorthEast SIPs with permission