Figure 9. Girder/Beam Housing (with and without post)

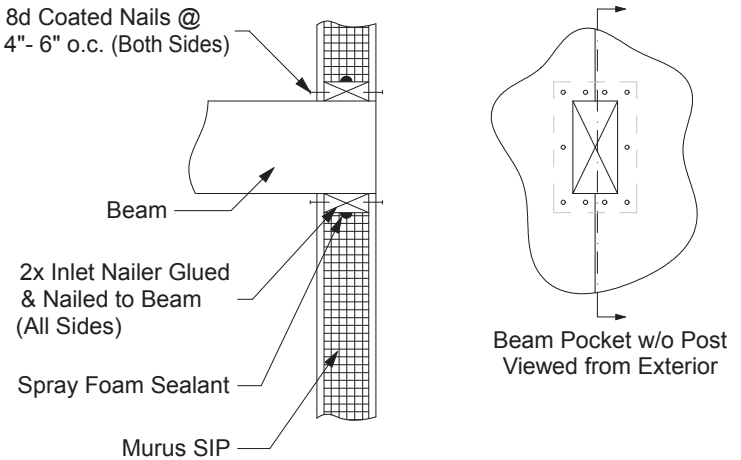

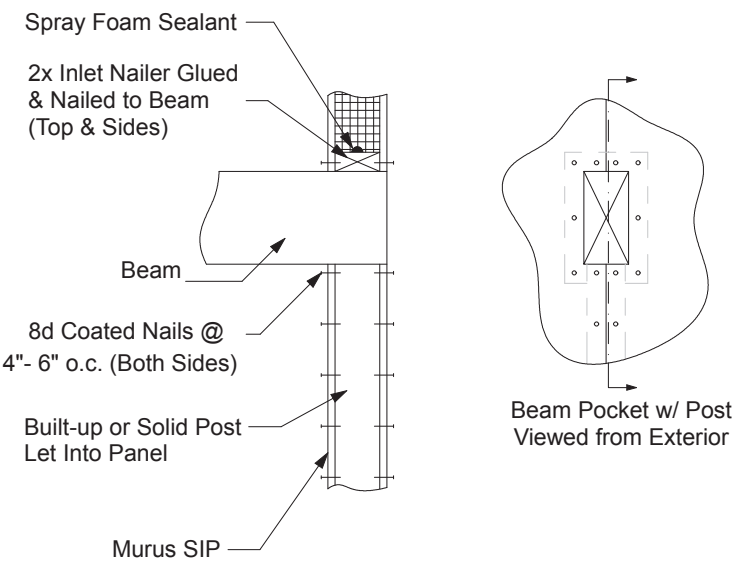

Detail courtesy The Murus Company, Inc. · Reproduced by NorthEast SIPs with permission