Figure 6C. Double Key Spline Connection Detail

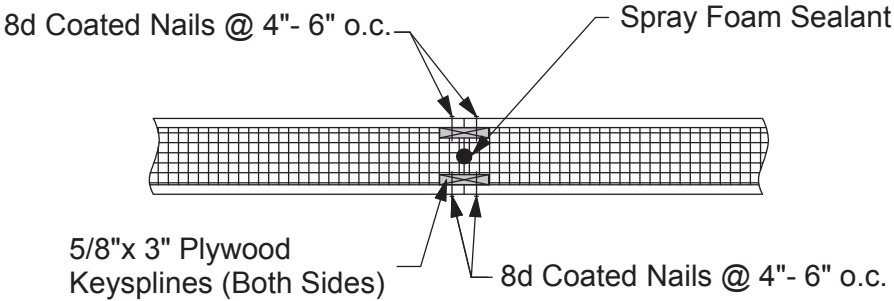

Detail courtesy The Murus Company, Inc. · Reproduced by NorthEast SIPs with permission