Figure 11B. Corner Connection with Miter Less Than or Greater Than 90 Degrees

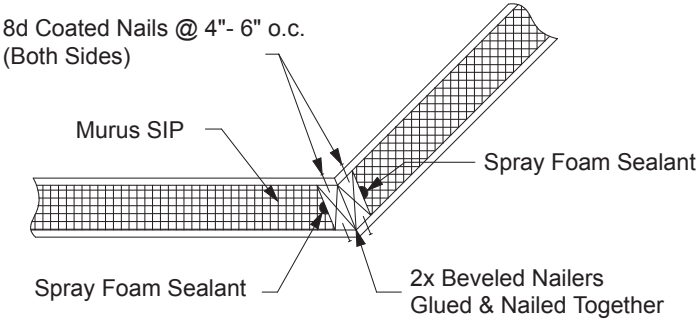

Detail courtesy The Murus Company, Inc. · Reproduced by NorthEast SIPs with permission